Data sheet	
Operating voltage	230V 50/60Hz
rpm turret	0.8
rpm splitter	10
Ø cup	70 mm tall cups (spec. CPL1581)
Cup turret applicable	5 columns Ø70 series S286
Splitters	5

FOR FITTING SYSTEM SEE Spec.1081

Total n°6 M4 insert (A-B-E-F-L-M)

CONFORM TO 2011/65/EU RoHS

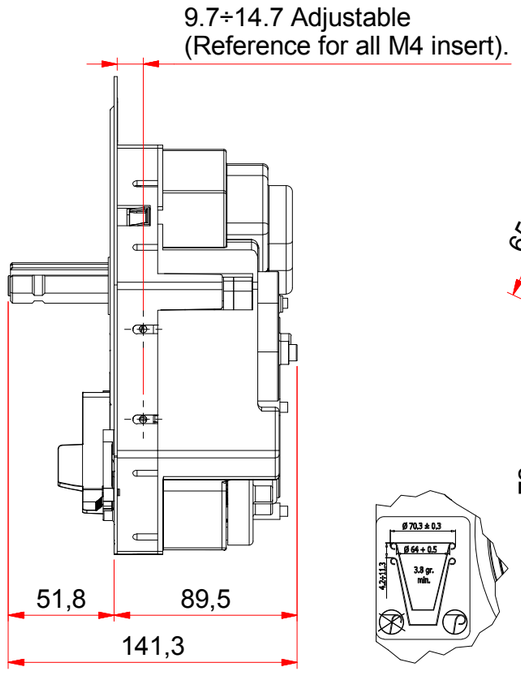

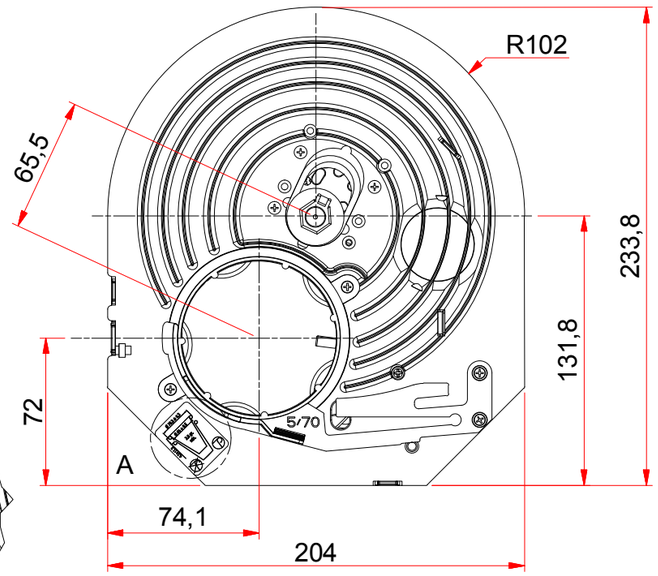

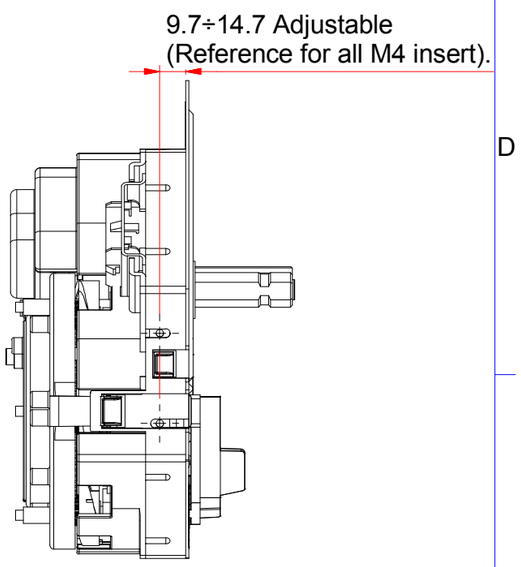

CABLE DATA

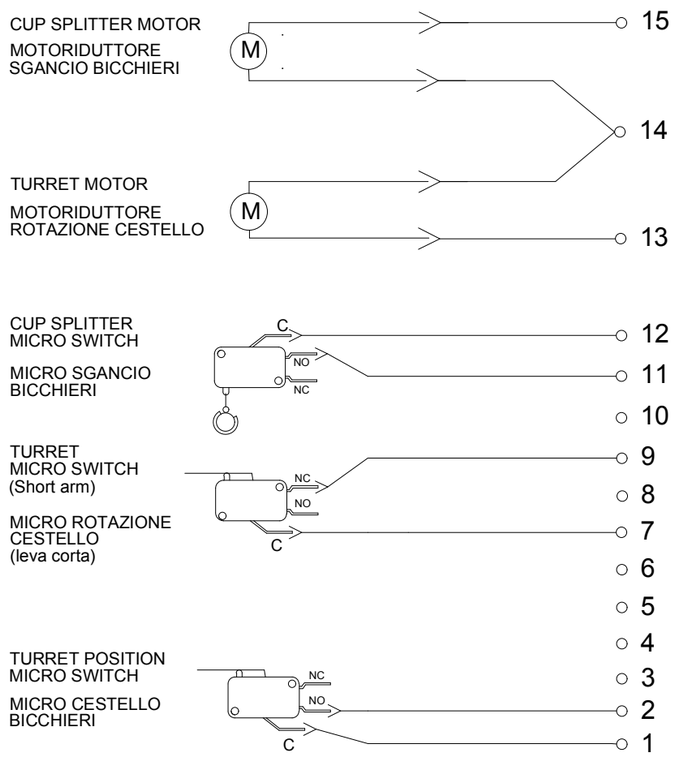

OUTPUT CONNECTION

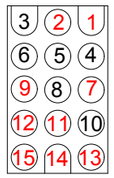

CONNETTORE
AMP 350784-VO
15 PIN MASCHI

CONNECTOR
AMP 350784-V0
15 MALE PINS

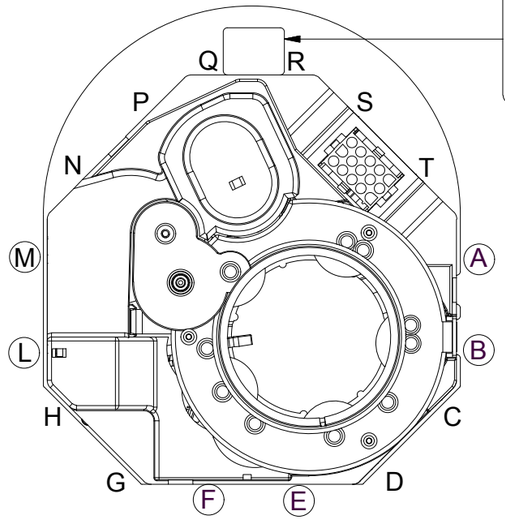

Componenti Vending
PCM 5 splitters
230V 50/60Hz - Ø70mm
P/N 672M2000BA
S/N XXXXXX
Week ww/yy

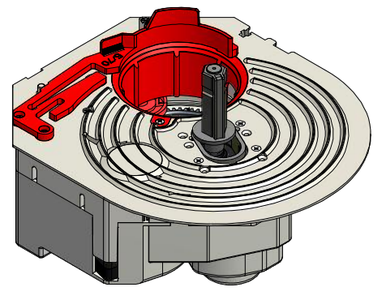

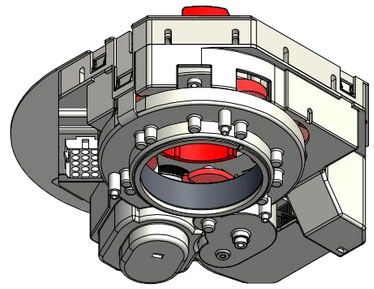

Rev.	Date	Drawn	Approved	Description	Reference	N° SRC
B	24/03/16	SA	PS	Inserito etichetta con caratteristiche del bicchiere da utilizzare.		8514
A	17/06/15	SA	PS	Emissione disegno		8315

Prog. N°:	Size:	Code: 672M2000BA
Volume:		
Weight:	Sheet:	Drawing: CDB5777B
Dens.:	Scale:	

Material:

Treatment:

Name:

PCM 5 CAMME 230 AC-70-C/BUSSOLA-L /CORTA

componenti

PPR0002C

© This document contains information which is proprietary to "COMPONENTI VENDING S.p.A."
No reproduction or publication of this document in whole or in part shall be made without the written approval of C.V. S.p.A.